SITNC1524

1. Description

The SITNC1524 is Transient Voltage Suppressor that designed to protect components which are connected to data and transmission lines against electrostatic discharge (ESD), electrical fast transient (EFT), and lightning. All pins are rated to withstand 30kV ESD pulses using the IEC61000-4-2 air discharge method.

2. Features

- IEC 61000-4-2 Level 4 ESD Protection
  - ±30kV Contact Discharge
  - ±30kV Air Discharge
- 350W Peak pulse Power (8/20us)
- Low clamping voltage
- Working voltage: 15/24V
- Low leakage current
- RoHS compliant
- Protecting one bi-directional lines
- Junction capacitance: 30pF Typ.

3. Applications

- LIN-bus protection
- Automotive applications

4. Ordering Information

Part Number	Package	Marking	Material	Packing	Quantity per reel	Flammability Rating	Reel Size
SITNC1524	SOD-323	|||||AM	Halogen free	Tape & Reel	3,000 PCS	UL 94V-0	7 inches

Table-1 Ordering information

5. Pin Configuration and Functions

Pin	Name	Description	Outline	Circuit Diagram
1	IO1	Connect to IO		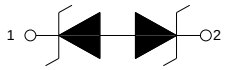
2	IO2	Connect to IO		

Table-2 Pin configuration

6. Specification

6.1. Absolute Maximum rating

Over operating free-air temperature range (unless otherwise noted)

Parameters	Symbol	Min.	Max.	Unit
Peak pulse power (tp=8/20us)@25℃	P_{pk}	-	350	W
Peak pulse current (tp=8/20us, pin1 to 2)@25℃	I_{PP}	-	9	A
Peak pulse current (tp=8/20us, pin2 to 1)@25℃	I_{PP}	-	6	A
ESD (IEC61000-4-2 air discharge) @25℃	V_{ESD}	-	±30	kV
ESD (IEC61000-4-2 contact discharge) @25℃	V_{ESD}	-	±30	kV
Junction temperature	T_J	-	150	℃
Operating temperature	T_{OP}	-40	125	℃
Storage temperature	T_{STG}	-55	150	℃
Lead temperature	T_L	-	260	℃

Table-3 Absolute Maximum rating

6.2. Electrical Characteristics

At TA = 25℃ unless otherwise noted

Parameter	Symbol	Conditions	Min.	Typ.	Max.	Units
Reverse Stand-off Voltage	V_{RWM}	Pin1 to Pin2			15	V
		Pin2 to Pin1			24	V
Reverse Breakdown Voltage	V_{BR}	IT=1mA, Pin1 to Pin2	16.5			V
		IT=1mA, Pin2 to Pin1	26			V
Reverse Leakage Current	I_R	V_{RWM}=15V			1	uA
		V_{RWM}=24V			1	uA
Clamping Voltage	V_C	I_{PP}=1A; Pin1 to 2; tp=8/20us		25		V
		I_{PP}=9A; Pin1 to 2; tp=8/20us		55		V
		I_{PP}=1A; Pin2 to 1; tp=8/20us		40		V
		I_{PP}=6A; Pin2 to 1; tp=8/20us		63		V
Junction Capacitance	C_J	I/O to GND; VR=0V; f=1MHz		30		pF

Table-4 Electrical Characteristics

Symbol	Parameters
V_{RWM}	Peak Reverse Working Voltage
I_R	Reverse Leakage Current @ V_{RWM}
V_{BR}	Breakdown Voltage @ I_T
I_T	Test Current
I_{PP}	Maximum Reverse Peak Pulse Current
V_C	Clamping Voltage @ I_{PP}

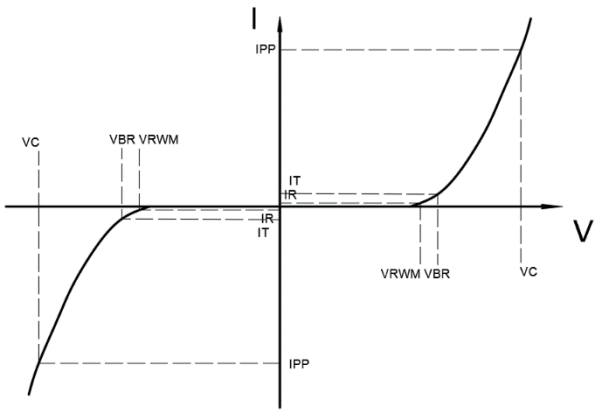

7. Typical Characteristic

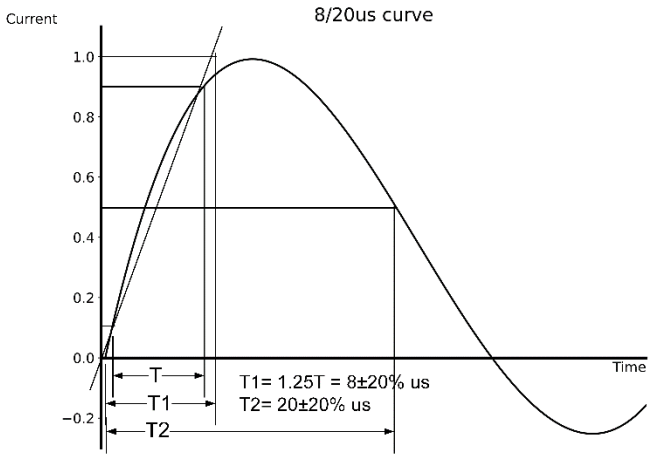

8. Typical Application

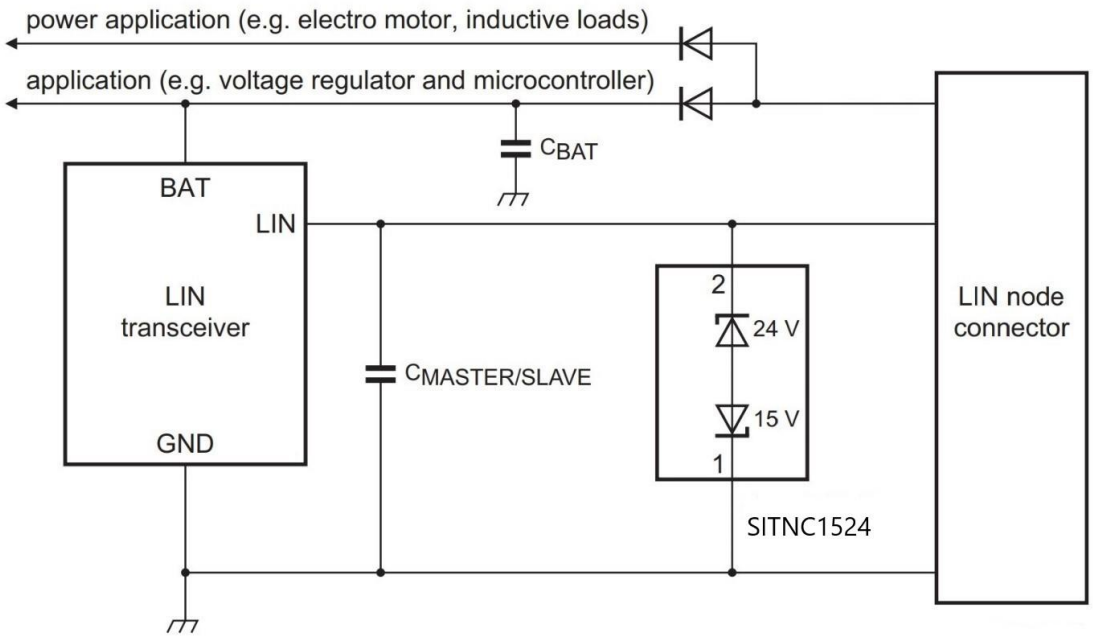

Typical Interface Application

9. Dimension

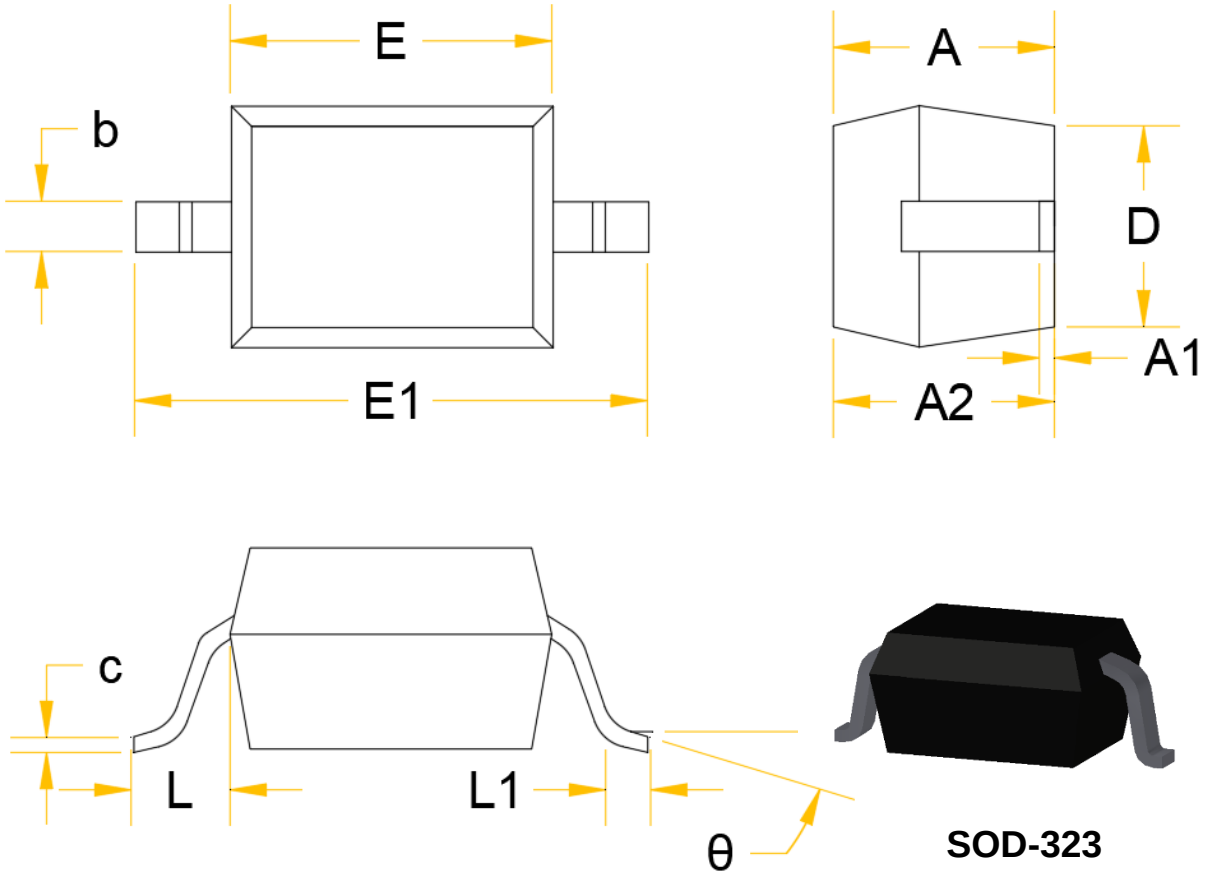

Symbol	Dimensions in Millimeters		Dimensions in Inches	
	Min.	Max.	Min.	Max.
A		1.000		0.039
A1	0.000	0.100	0.000	0.004
A2	0.800	0.900	0.031	0.035
b	0.250	0.350	0.010	0.014
C	0.080	0.150	0.003	0.006
D	1.200	1.400	0.047	0.055
E	1.600	1.800	0.063	0.071
E1	2.550	2.750	0.100	0.108
L	0.475REF		0.019REF	
L1	0.250	0.400	0.010	0.016
θ	0°	8°	0°	8°

Table-6 product dimensions

10. Recommended Land Pattern

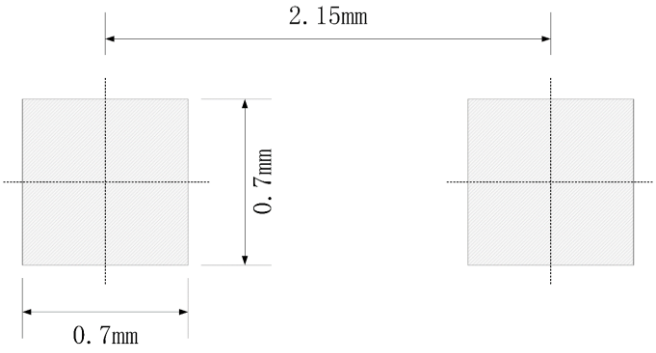

Note:

1. Controlling dimension: in millimeters
2. General tolerance: ±0.05mm
3. The pad layout is for reference only
4. Unit: mm

DISCLAIMER

SIT PROVIDES TECHNICAL AND RELIABILITY DATA (INCLUDING DATASHEETS), DESIGN RESOURCES (INCLUDING REFERENCE DESIGNS), APPLICATION OR OTHER DESIGN ADVICE, SAFETY INFORMATION, AND OTHER RESOURCES “AS IS” AND WITH ALL FAULTS, AND DISCLAIMS ALL WARRANTIES, EXPRESS AND IMPLIED, INCLUDING WITHOUT LIMITATION ANY IMPLIED WARRANTIES OF MERCHANTABILITY, FITNESS FOR A PARTICULAR PURPOSE OR NON-INFRINGEMENT OF THIRD PARTY INTELLECTUAL PROPERTY RIGHTS.

These resources are intended for skilled developers designing with SIT products. You are solely responsible for
(1) selecting the appropriate SIT products for your application;
(2) designing, validating and testing your application;
(3) ensuring your application meets applicable standards, and any other safety, security, or other requirements.
These resources are subject to change without notice. SIT grants you permission to use these resources only for development of an application that uses the SIT products described in the resource. Other reproduction and display of these resources are prohibited. No license is granted to any other SIT intellectual property right or to any third party intellectual property right. SIT disclaims responsibility for, and you will fully indemnify SIT and its representatives against, any claims, damages, costs, losses, and liabilities arising out of your use of these resources. SIT’s products are provided subject to SIT’s Terms of Sale or other applicable terms available either on www.SIT.com or provided in conjunction with such SIT products. SIT’s provision of these resources does not expand or otherwise alter SIT’s applicable warranties or warranty disclaimers for SIT products.